SAIVS 赛维思

Add: NO. 626 Yuncai Road, Yunlong Town,
Yinzhou District, Ningbo, Zhejiang, China

E-mail: sales@saivs.com

Web: www.saivs-industrial.com

# SAIVS HYDRAULIC

Ningbo SAIVS Machinery Co., Ltd.

## Company profile

Ningbo SAIVS Machinery Co.,Ltd. Is located in yun long town, a coastal city of Ningbo, zhejiang province. The force on the production of DC electric hydraulic push rod, DC electric hydraulic station, DC electric hydraulic lift, electric hydraulic pressure case become warped, micro pump and other products of the company, including DC electric hydraulic system has many patent technology, products are widely used in sanitation trucks, electric three-wheeled agricultural vehicles, yacht outboard machine, lift platform, ship car mechanics etc fields, new product features, reliable performance, stable quality, well received by customers. Continuous innovation of product technology, precision and efficient production, scientific and human enterprise management, so that our company rapid development.

Ningbo SAIVS Machinery Co.,Ltd. integrity, strength and product quality has been recognized by the industry. Welcome worldwide friends to visit us.

## ///Production equipment

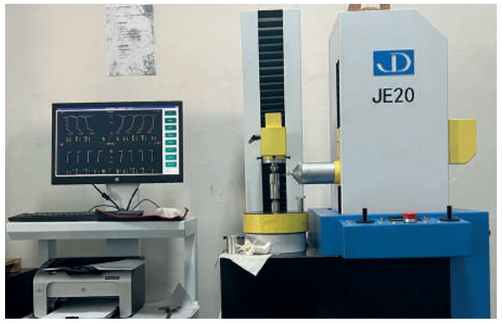

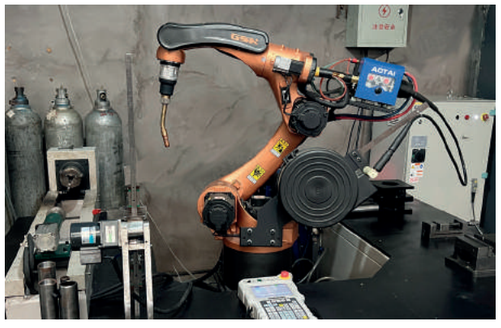

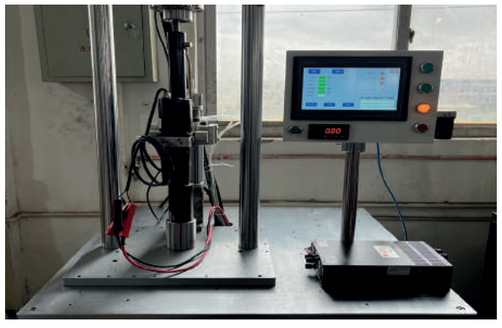

SAIVS

## ///Application area

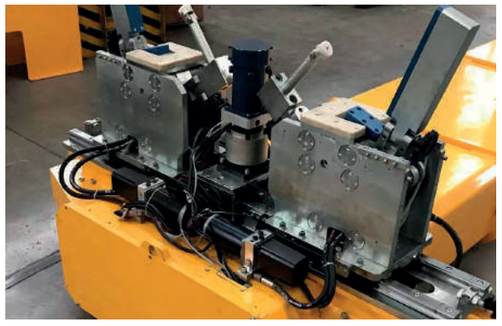

# CATALOG

### >>> Miniature hydraulic station series


- 15 MPA hydraulic station ····· 01
- 20 MPA hydraulic station ····· 02


### >>> SH Series Push Rod


- SH63-5T ····· 03
- SH50-3.2T ····· 04
- SH40-2T ····· 05
- SH32-1.2T ····· 06


### >>> SG Series Push Rod


- SG50-2.5T ····· 07
- SG40-1.8T ····· 09
- SG32-1.0T ····· 11
- SG20-0.4T ····· 13
- SG63-4.5T ····· 14
- Outboard Hydraulic Warper/Carrier core ····· 15
- SG32-350 Fission push rod ····· 16
- SG40-60F Fission push rod ····· 16

# 15MPa Hydraulic Station

SS04-350

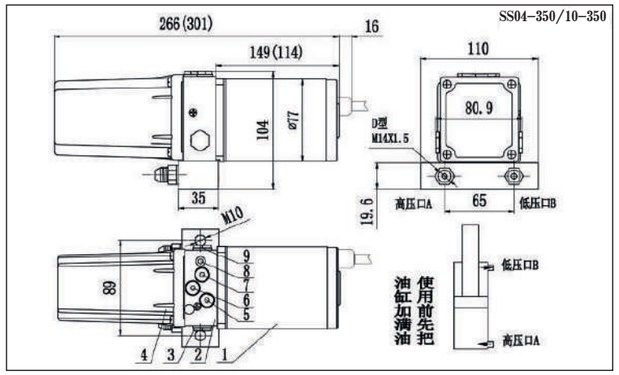

SS10-350

## Fuction

1. Motor：12V/24V/48V
2. Gear pump valve body assembly: self-locking, reversing, overflow pressure highly integrated。
3. Retract the one-way plug: there is a filter net, and it is cleaned every six months。
4. Oil sac cover: inside oil sac, 350 ml
5. Retractable pressure adjusting plug: unscrew the plug, adjust the nut inside, tighten the retractable force increases, loosen the retractable force decreases
6. Tank filler plug: the oil in the tank is added from here, and the hydraulic oil is replaced from here
7. Jacking pressure adjustment plug: unscrew the plug, adjust the nut inside, tighten the jacking force increases, loosen the jacking force decreases。
8. Safety valve: loosen the safety valve to enable the ejector rod to recover automatically under the action of the load capacity. The next time you use it, be sure to screw it tight before using it。
9. Jacking unidirectional plug: there is a filter net and it is cleaned once every six months
10. Lower connecting port of oil cylinder: high pressure port 11. Upper connecting port of cylinder: low pressure port

| Item | SS40-350 | SS10-350 |
|---|---|---|
| Voltage | DC220V/DC12V/24V/48V | DC220V/DC24V/48V |
| Power | 300W | 800W |
| Oil voltage | 350ml | 350ml |
| Max presure | 15MPa | 15MPa |
| displacement | 9ml/s | 19ml/s |
| Pump type | Bi-directional gear pump | Bi-directional gear pump |
| specification | L-HV 46# | L-HV 46# |
| temperature | -20~60° C | -20~60° C |
| Frequency | 4min/each time | 4min/each time |
| Waterproof rate | IPX6 | IPX6 |
| N.W/G.W | 3.1KG/3.3KG | 4.1KG/4.4KG |
| Packing Size | 30×14×13CM | 30×20×13CM |





# 20MPa Hydraulic Station

This micro hydraulic station, DC motor drive, by controlling the direct current motor forward and reverse, two-way pressure output Internal integration of relief valve, one-way valve, reversing valve, safety valve, two-way pressure self-locking Widely used in a variety of DC micro-hydraulic machinery, such as robot, electro-hydraulic platform, electric dump truck, marine hydraulic system and automotive hydraulic control system Pressure output interface and mounting dimensions can be customized according to customer.

SS40-600

SS40-600X

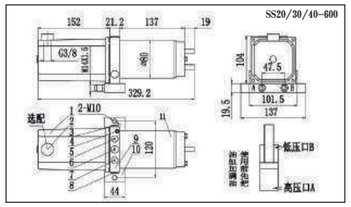


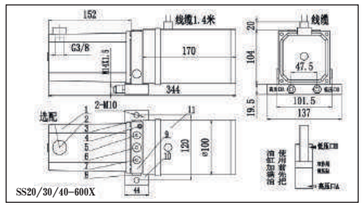


## Fuction

1. fuel tank：volume600ml.
2. fuel tank cap：screw thread G3/8.
3. Lifting one-way plug：One-way valve inside.
4. Relief valve：When the electric push rod is lifted and cannot be lowered and retracted due to an unexpected cause,the screw relief valve will be released. then jacking rod will automatic recovery be sure to tighten the next time you use it.
5. Lifting pressure regulating plug：Unscrew the plug, adjust the nut inside, tighten the lifting force of the top, and reduce the lifting force of the screw.
6. Refueling plug ：screw thread G1/8.
7. Retract pressure adjusting plug：Open the plug and adjust the nut.
8. retracted one-way plug：one-way valve inside.
9. valve body.
10. Base：there is oil hose connector and mounting fixed hole level.
11. motor: DC 24V/48V.
12. motor sealing cover：optional.

| Item | SS40-600 | SS40-600X |
|---|---|---|
| Voltage | DC24V/48V | AC220V/AC380V |
| Power | 800W | 300W |
| Oil voltage | 600ml | 600ml |
| Max presure | 20MPa | 20MPa |
| displacement | 0.38cc/0.6cc/0.88cc | 0.38cc/0.6cc/0.88cc |
| Pump type | Bi-directional gear pump | Bi-directional gear pump |
| specification | L-HV 46# | L-HV 46# |
| temperature | -30-70°C | -30-70°C |
| Frequency | 6min/each time | 6min/each time |
| Waterproof rate | IPX5 | IPX5 |
| N.W/G.W | 4.9KG/5.2KG | 7.4KG/7.7KG |
| Packing Size | 41×20×13CM | 41×20×13CM |

# SH Series Push Rod

## SH63S

SH63S

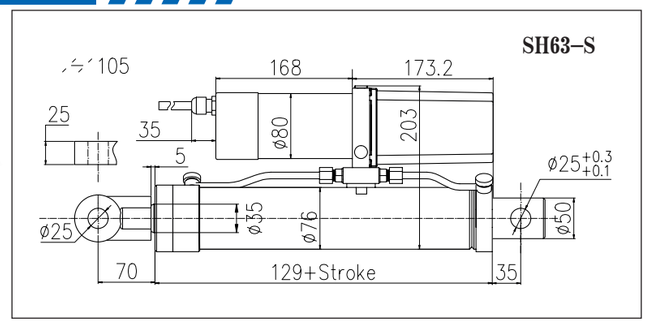


| Item | SH63 Customize | SH63 Customize | SH63 Customize |
|---|---|---|---|
| voltage | DC24V/48V | DC24V/48V | DC24V/48V |
| power | 800W | 1000W | 1200W |
| displacement | 0.38CC | 0.6CC | 0.88CC |
| Route | 100~500mm | 100~500mm | 100~500mm |
| Top of the lift | 5T | 5T | 5T |
| Retraction force | 3.5T | 3.5T | 3.5T |
| Up speed(load 3.7T) | 6–7mm/s | 10–11mm/s | 14–15mm/s |
| temperature | –30~70° C | –30~70° C | –30~70° C |
| Frequency | 6min/each time | 6min/each time | 6min/each time |
| Waterproof rate | IPX5 | IPX5 | IPX5 |
| Weight of cylinder per 10 CM stroke | 1.869KG | | |

SH63–400

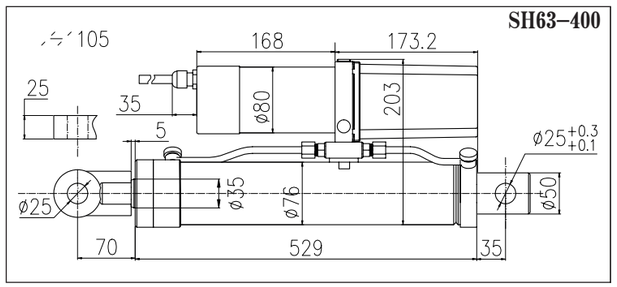


| Item | SH63–400 | SH63–400 | SH63–400 |
|---|---|---|---|
| voltage | DC24V/48V | DC24V/48V | DC24V/48V |
| power | 800W | 1000W | 1200W |
| displacement | 0.38CC | 0.6CC | 0.88CC |
| Route | 400mm | 400mm | 400mm |
| Top of the lift | 5T | 5T | 5T |
| Retraction force | 3.5T | 3.5T | 3.5T |
| Up speed(load 3.7T) | 6–7mm/s | 10–11mm/s | 14–15mm/s |
| temperature | –30~70° C | –30~70° C | –30~70° C |
| Frequency | 6min/each time | 6min/each time | 6min/each time |
| Waterproof rate | IPX5 | IPX5 | IPX5 |
| N.W/G.W | 19.54KG/20.1KG | 19.54KG/20.1KG | 19.54KG/20.1KG |
| Packing Size | 80×23×15CM | 80×23×15CM | 80×23×15CM |

SH50–S

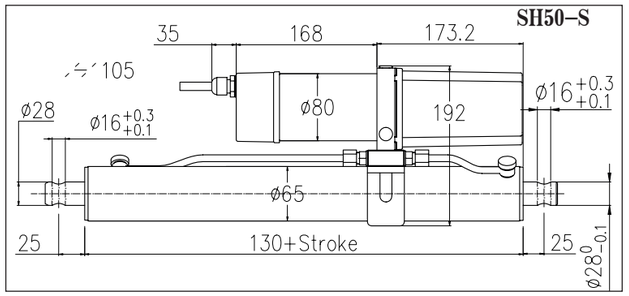


| Item | SH50 Customize | SH50 Customize | SH50 Customize |
|---|---|---|---|
| voltage | DC24V/48V | DC24V/48V | DC24V/48V |
| power | 800W | 1000W | 1200W |
| displacement | 0.38CC | 0.6CC | 0.88CC |
| Route | 50~700mm | 50~700mm | 50~700mm |
| Top of the lift | 3.2T | 3.2T | 3.2T |
| Retraction force | 2T | 2T | 2T |
| Up speed(load 2.2T) | 10–11mm/s | 16–17mm/s | 23–24mm/s |
| temperature | –30~70° C | –30~70° C | –30~70° C |
| Frequency | 6min/each time | 6min/each time | 6min/each time |
| Waterproof rate | IPX5 | IPX5 | IPX5 |
| Weight of cylinder per 10 CM stroke | 1.47KG | | |

SH50–200

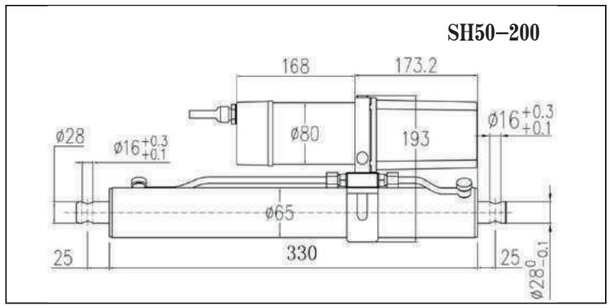


| Item | SH50–200 | SH50–200 | SH50–200 |
|---|---|---|---|
| voltage | DC24V/48V | DC24V/48V | DC24V/48V |
| power | 800W | 1000W | 1200W |
| displacement | 0.38CC | 0.6CC | 0.88CC |
| Route | 200mm | 200mm | 200mm |
| Top of the lift | 3.2T | 3.2T | 3.2T |
| Retraction force | 2T | 2T | 2T |
| Up speed(load 3.7T) | 10–11mm/s | 16–17mm/s | 23–24mm/s |
| temperature | –30~70° C | –30~70° C | –30~70° C |
| Frequency | 6min/each time | 6min/each time | 6min/each time |
| Waterproof rate | IPX5 | IPX5 | IPX5 |
| N.W/G.W | 12.5KG/13KG | 12.5KG/13KG | 12.5KG/13KG |
| Packing Size | 80×23×15CM | 80×23×15CM | 80×23×15CM |

SH40S

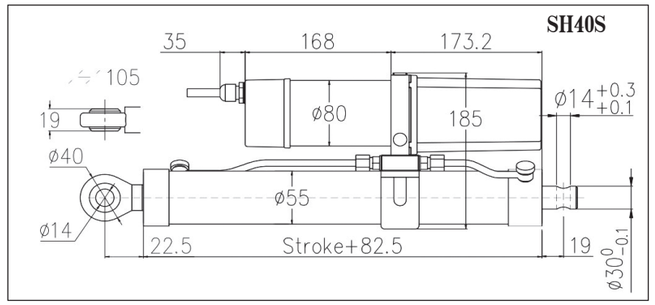


| Item | SH40 Customize | SH40 Customize | SH40 Customize |
|---|---|---|---|
| Voltage | DC24V/48V | DC24V/48V | DC24V/48V |
| Power | 800W | 1000W | 1200W |
| displacement | 0.38cc | 0.6cc | 0.88cc |
| Route | 50-1000mm | 50-1000mm | 50-1000mm |
| Top of the lift | 2T | 2T | 2T |
| Retraction force | 1.3T | 1.3T | 1.3T |
| Up speed | 16-18mm/s | 25-27mm/s | 36-38mm/s |
| temperature | -30~70°C | -30~70°C | -30~70°C |
| Frequency | 6min/each time | 6min/each time | 6min/each time |
| Waterproof rate | IPX5 | IPX5 | IPX5 |
| Weight of cylinder per 10 CM stroke | | 1.177KG | |

SH40–500

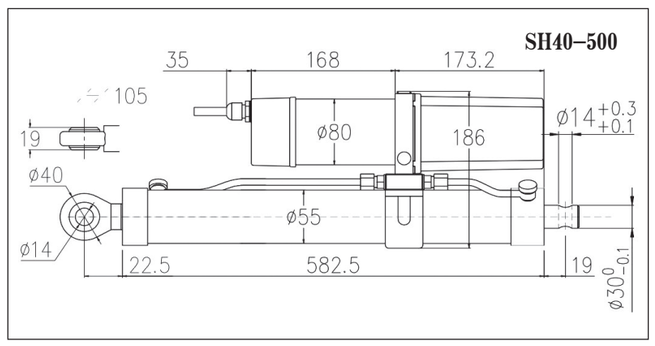


| Item | SH40-500 | SH40-500 | SH40-500 |
|---|---|---|---|
| Voltage | DC24V/48V | DC24V/48V | DC24V/48V |
| Power | 800W | 1000W | 1200W |
| displacement | 0.38cc | 0.6cc | 0.88cc |
| Route | 500mm | 500mm | 500mm |
| Top of the lift | 2T | 2T | 2T |
| Retraction force | 1.3T | 1.3T | 1.3T |
| Up speed | 16-18mm/s | 25-27mm/s | 36-38mm/s |
| temperature | -30~70°C | -30~70°C | -30~70°C |
| Frequency | 6min/each time | 6min/each time | 6min/each time |
| Waterproof rate | IPX5 | IPX5 | IPX5 |
| N.W/G.W | | 13.1KG/13.6KG | |
| Packing Size | | 80×23×15CM | |

SH32S

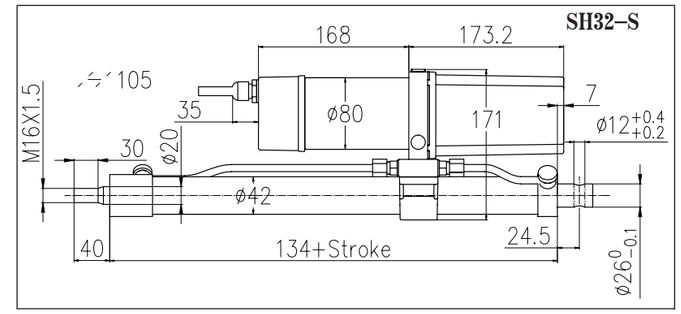


| Item | SH32 Customize | SH32 Customize | SH32 Customize |
|---|---|---|---|
| voltage | DC24V/48V | DC24V/48V | DC24V/48V |
| power | 800W | 1000W | 1200W |
| displacement | 0.38CC | 0.6CC | 0.88CC |
| Route | 50~800mm | 50~800mm | 50~800mm |
| Top of the lift | 1.2T | 1.2T | 1.2T |
| Retraction force | 700KG | 700KG | 700KG |
| Up speed(load 1.7T) | 25–26mm/s | 39–40mm/s | 55–56mm/s |
| temperature | –30~70° C | –30~70° C | –30~70° C |
| Frequency | 6min/each time | 6min/each time | 6min/each time |
| Waterproof rate | IPX5 | IPX5 | IPX5 |
| Weight of cylinder per 10 CM stroke | | 0.703KG | |

SH32–800

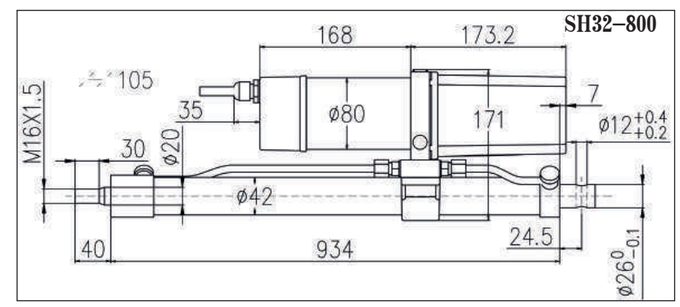


| Item | SH32-800 | SH32-800 | SH32-800 |
|---|---|---|---|
| Voltage | DC24V/48V | DC24V/48V | DC24V/48V |
| Power | 800W | 1000W | 1200W |
| displacement | 0.38cc | 0.6cc | 0.88cc |
| Route | 800mm | 800mm | 800mm |
| Top of the lift | 1.2T | 1.2T | 1.2T |
| Retraction force | 0.7T | 0.7T | 0.7T |
| Up speed | 25-26mm/s | 39-40mm/s | 55-56mm/s |
| temperature | -30~70°C | -30~70°C | -30~70°C |
| Frequency | 6min/each time | 6min/each time | 6min/each time |
| Waterproof rate | IPX5 | IPX5 | IPX5 |
| N.W/G.W | | 12.62KG/13.32KG | |
| Packing Size | | 105×13×20CM | |

# SG Series Push Rod

SG50S

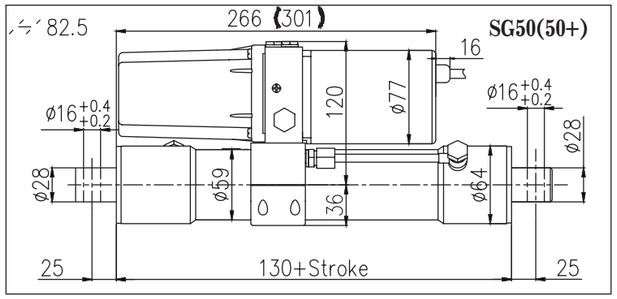


| Item | SG50 Customize | SG50+Customize |
|---|---|---|
| Voltage | DC220V/DC12V/24V/48V | DC220V/DC24V/48V |
| Power | 300W | 800W |
| Route | 50~400mm | 50~400mm |
| Top of the lift | 2.5T | 2.5T |
| Retraction force | 1.5T | 1.5T |
| Up speed | 5~6mm/s | 10~12mm/s |
| temperature | -20~60° C | -20~60° C |
| Frequency | 4min/each time | 4min/each time |
| Waterproof rate | IPX6 | IPX6 |
| Weight of cylinder per 10 CM stroke | 1.088KG | |

SG50−180

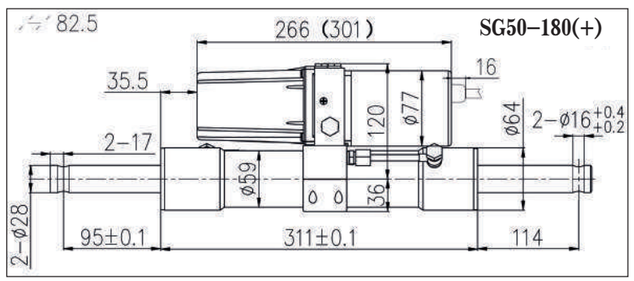


| Item | SG50-180 | SG50-180+ |
|---|---|---|
| Voltage | DC220V/DC12V/24V/48V | DC220V/DC24V/48V |
| Power | 300W | 800W |
| Route | 180mm | 180mm |
| Top of the lift | 2.5T | 2.5T |
| Retraction force | 1.5T | 1.5T |
| Up speed | 5~6mm/s | 10~12mm/s |
| temperature | -20~60° C | -20~60° C |
| Frequency | 4min/each time | 4min/each time |
| Waterproof rate | IPX6 | IPX6 |
| N.W/G.W | 9.2KG/9.5KG | 10.2KG/10.5KG |
| Packing Size | 61×20×13CM | 61×20×13CM |

SG50−200

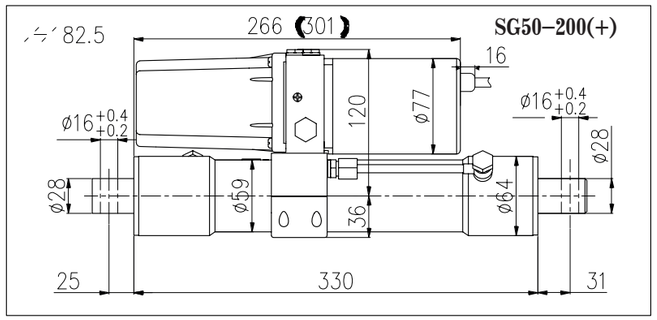


| Item | TG50−200 | TG50−200+ |
|---|---|---|
| voltage | DC220V/DC12V/24V/48V | DC220V/DC24/48V |
| power | 300W | 800W |
| Route | 200mm | 200mm |
| Top of the lift | 2.5T | 2.5T |
| Retraction force | 1.5T | 1.5T |
| Up speed | 5~6mm/s | 10~12mm/s |
| temperature | −20~60° C | −20~60° C |
| Frequency | 4min/each time | 4min/each time |
| Waterproof rate | IPX6 | IPX6 |
| N.W/G.W | 8.8KG/9.1KG | 9.8KG/10.1KG |
| Packing Size | 40 × 20 × 13CM | 40 × 20 × 13CM |

SG50−285

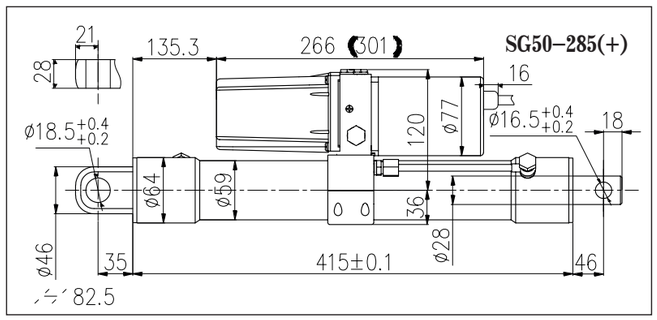


| Item | SG50-285 | SG50-285+ |
|---|---|---|
| Voltage | DC220V/DC12V/24V/48V | DC220V/DC24V/48V |
| Power | 300W | 800W |
| Route | 285mm | 285mm |
| Top of the lift | 2.5T | 2.5T |
| Retraction force | 1.5T | 1.5T |
| Up speed | 5-6mm/s | 10-11mm/s |
| temperature | -20~60°C | -20~60°C |
| Frequency | 4min/each time | 6min/each time |
| Waterproof rate | IPX6 | IPX6 |
| N.W/G.W | 10KG/10.4KG | 11KG/11.4KG |
| Packing Size | 61×20×13CM | 61×20×13CM |

SG50–450X

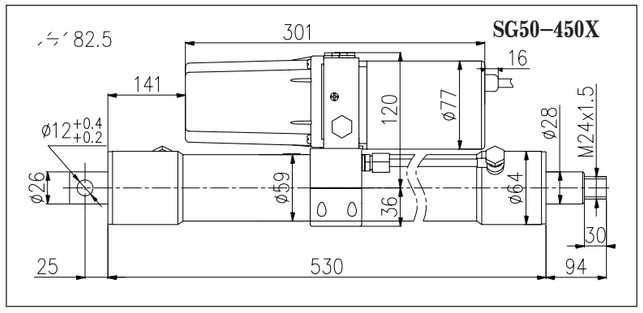


| Item | SG50-450X | SG50-450X |
|---|---|---|
| Voltage | DC220V/DC12V/24V/48V | DC220V/DC24V/48V |
| Power | 300W | 800W |
| Route | 450mm | 450mm |
| Top of the lift | 2.5T | 2.5T |
| Retraction force | 1.5T | 1.5T |
| Up speed | 5-6mm/s | 10-11mm/s |
| temperature | -20~60°C | -20~60°C |
| Frequency | 4min/each time | 6min/each time |
| Waterproof rate | IPX6 | IPX6 |
| N.W/G.W | 12.1KG/12.6KG | 13.1KG/13.6KG |
| Packing size | 80*23*15CM | 80*23*15CM |

SG40S

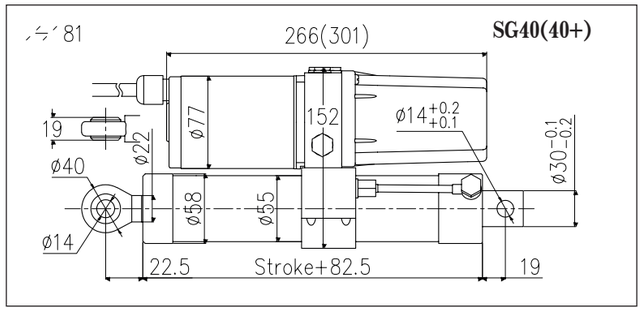


| Item | SG40 Customize | SG40 Customize |
|---|---|---|
| Voltage | DC220V/DC12V/24V/48V | DC220V/DC24V/48V |
| Power | 300W | 800W |
| Route | 50-800mm | 50-800mm |
| Top of the lift | 1.8T | 1.8T |
| Retraction force | 1T | 1T |
| Up speed | 7-8mm/s | 15-18mm/s |
| temperature | -20~60°C | -20~60°C |
| Frequency | 4min/each time | 6min/each time |
| Waterproof rate | IPX6 | IPX6 |
| Weight of cylinder per 10 CM stroke | 1.177KG | |

SG40–500

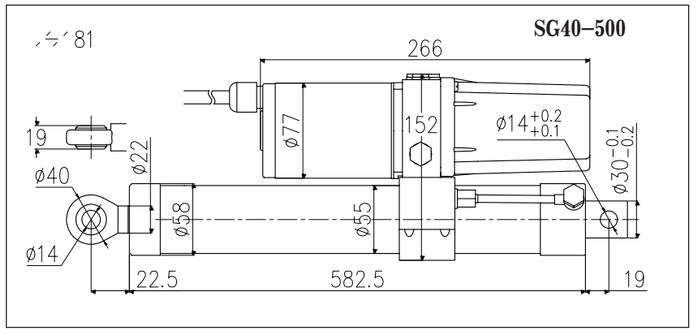


| Item | SG40-500 | SG40-500+ |
|---|---|---|
| Voltage | DC220V/DC12V/24V/48V | DC220V/DC24V/48V |
| Power | 300W | 800W |
| Route | 500mm | 500mm |
| Top of the lift | 1.8T | 1.8T |
| Retraction force | 1T | 1T |
| Up speed | 7-8mm/s | 15-18mm/s |
| temperature | 20~60 | 20~60 |
| Frequency | 4min/each time | 6min/each time |
| Waterproof rate | IPX6 | IPX6 |
| N.W/G.W | 10.9KG/11.4KG | 11.9KG/12.4KG |
| Packing size | 80*23*15CM | 80*23*15CM |

SG40–203X

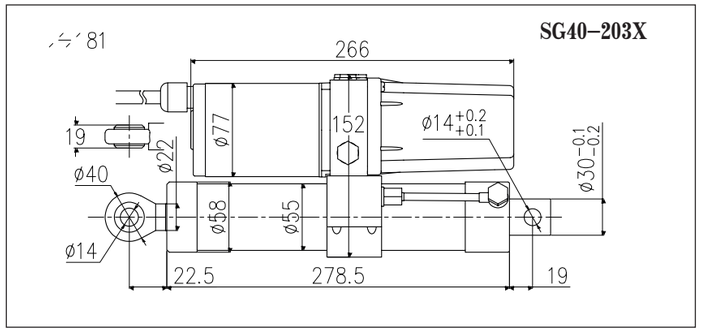


| Item | SG40-203X | |
|---|---|---|
| Voltage | DC220V/DC12V/24V/48V | DC220V/DC24V/48V |
| Power | 300W | 800W |
| Route | 203mm | 203mm |
| Top of the lift | 1T | 1.8T |
| Retraction force | 0.7T | 1T |
| Up speed | 16-17mm/s | 15-18mm/s |
| temperature | -20~60°C | -20~60°C |
| Frequency | 4min/each time | 4min/each time |
| Waterproof rate | IPX6 | IPX6 |
| N.W/G.W | 7.4KG/7.7KG | 8.4KG/8.7KG |
| Packing size | 40*20*13CM | 40*20*13CM |

SG32S

TG32s

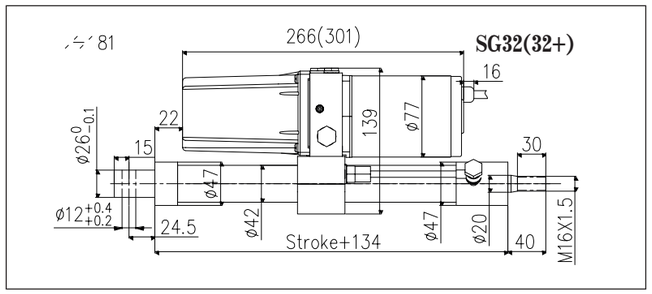


| Item | SG32 Customize | SG32+Customize |
|---|---|---|
| Voltage | DC220V/DC12V/24V/48V | DC220V/DC24V/48V |
| Power | 300W | 800W |
| Route | 50~800mm | 50~800mm |
| Top of the lift | 1T | 1T |
| Retraction force | 0.5T | 0.5T |
| Up speed | 10~12mm/s | 20~25mm/s |
| temperature | -20~60° C | -20~60° C |
| Frequency | 4min/each time | 4min/each time |
| Waterproof rate | IPX6 | IPX6 |
| Weight of cylinder per 10 CM stroke | 0.703KG | |

SG32–300X

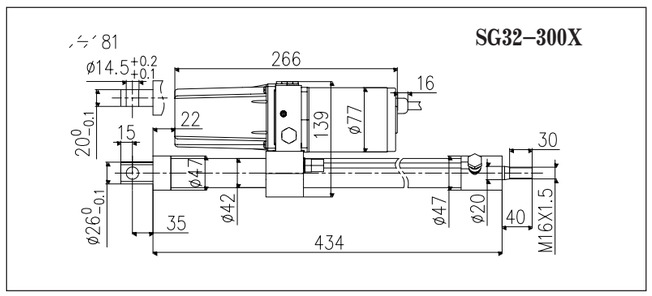


| Item | SG32-300X | |
|---|---|---|
| Voltage | DC220V/DC12V/24V/48V | DC220V/DC24V/48V |
| Power | 300W | 800W |
| Route | 300mm | 300mm |
| Top of the lift | 500KG | 1T |
| Retraction force | 200KG | 0.5T |
| Up speed | 20-25mm/s | 20~25mm/s |
| temperature | -20~60°C | -20~60° C |
| Frequency | 4min/each time | 4min/each time |
| Waterproof rate | IPX6 | IPX6 |
| N.W/G.W | 7.4KG /7.9KG | 8.4KG /8.9KG |
| Packing size | 80*20*13CM | 80*20*13CM |

TG32-350X

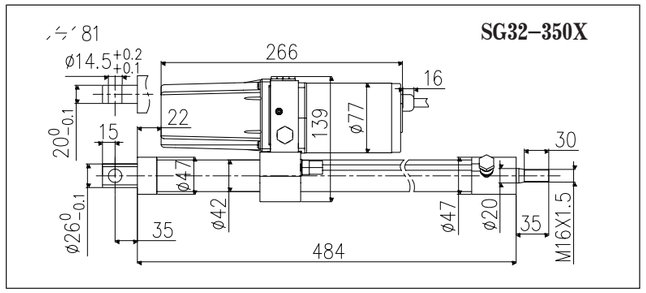


| Item | SG32-350X | |
|---|---|---|
| Voltage | DC220V/DC12V/24V/48V | DC220V/DC24V/48V |
| Power | 300W | 800W |
| Route | 350mm | 350mm |
| Top of the lift | 500KG | 1T |
| Retraction force | 200KG | 0.5T |
| Up speed | 20-25mm/s | 20~25mm/s |
| temperature | -20~60°C | -20~60° C |
| Frequency | 4min/each time | 4min/each time |
| Waterproof rate | IPX6 | IPX6 |
| N.W/G.W | 7.8KG/8.3KG | 8.8KG/9.3KG |
| Packing size | 80*20*13CM | 80*20*13CM |

TG32-500

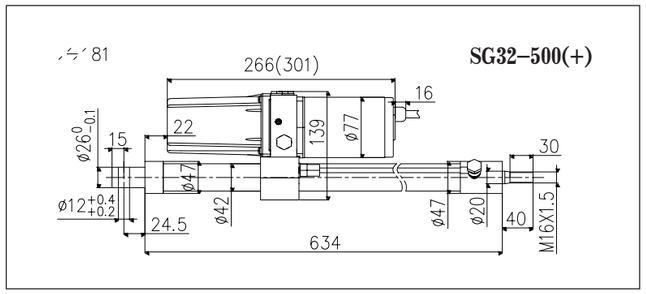


| Item | SG32–500(+) | SG32–500(+) |
|---|---|---|
| voltage | DC220V/DC12V/24V/48V | DC220V/DC24V/48V |
| power | 300W | 800W |
| Route | 500mm | 500mm |
| Top of the lift | 1T | 1T |
| Retraction force | 0.5T | 0.5T |
| Up speed | 10~12mm/s | 20~25mm/s |
| temperature | −20~60° C | −20~60° C |
| Frequency | 4min/each time | 4min/each time |
| Waterproof rate | IPX6 | IPX6 |
| N.W/G.W | 8.9KG/9.4KG | 10.9KG/11.4KG |
| Packing Size | 80 × 20 × 13CM | 80 × 20 × 13CM |

SG20S

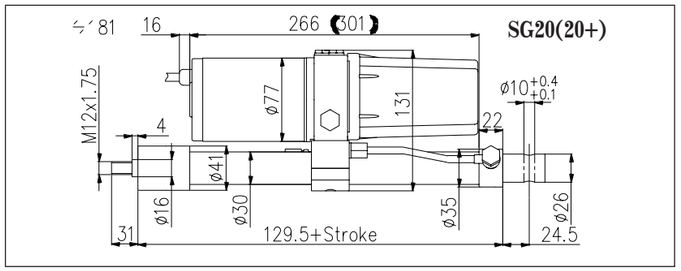


| Item | SG20 Customize | SG20+Customize |
|---|---|---|
| Voltage | DC220V/DC12V/24V/48V | DC220V/DC24V/48V |
| Power | 300W | 800W |
| Route | 50~800mm | 50~800mm |
| Top of the lift | 400KG | 400KG |
| Retraction force | 110KG | 110KG |
| Up speed | 26~30mm/s | 50~58mm/s |
| temperature | -20~60° C | -20~60° C |
| Frequency | 4min/each time | 6min/each time |
| Waterproof rate | IPX6 | IPX6 |
| Weight of cylinder per 10 CM stroke | 0.542KG | |

SG20–485

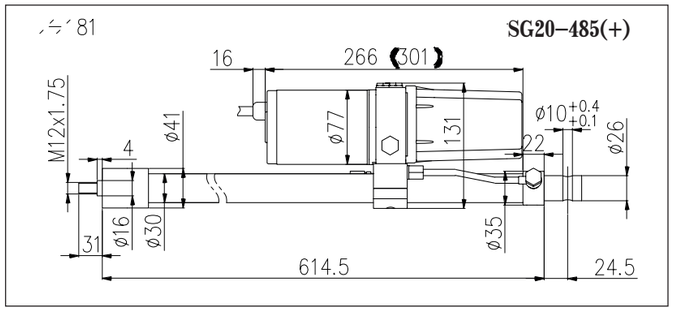


| Item | SG20-485 | SG20-485+ |
|---|---|---|
| Voltage | DC220V/DC12V/24V/48V | DC220V/DC24V/48V |
| Power | 300W | 800W |
| Route | 485mm | 485mm |
| Top of the lift | 400KG | 400KG |
| Retraction force | 110KG | 110KG |
| Up speed | 26-30mm/s | 50-58mm/s |
| temperature | -20~60°C | -20~60°C |
| Frequency | 4min/each time | 6min/each time |
| Waterproof rate | IPX6 | IPX6 |
| N.W/G.W | 6.7KG/7.2KG | 7.7KG/8.2KG |
| Packing Size | 80×20×13CM | 80×20×13CM |

SG63S

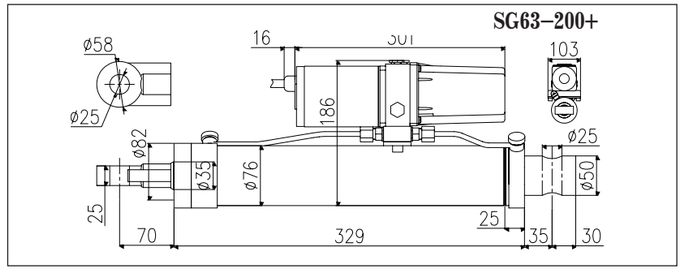


| Item | SG63 Customize | SG63 Customize |
|---|---|---|
| Voltage | DC220V/DC12V/24V/48V | DC220V/DC24V/48V |
| Power | 300W | 800W |
| Route | 50-300mm | 50-300mm |
| Top of the lift | 4.5T | 4.5T |
| Retraction force | 2.8T | 2.8T |
| Up speed | 2-3mm/s | 6-7mm/s |
| temperature | -20~60°C | -20~60°C |
| Frequency | 4min/each time | 6min/each time |
| Waterproof rate | IPX6 | IPX6 |
| Weight of cylinder per 10 CM stroke | 1.869KG | |

SG63–200

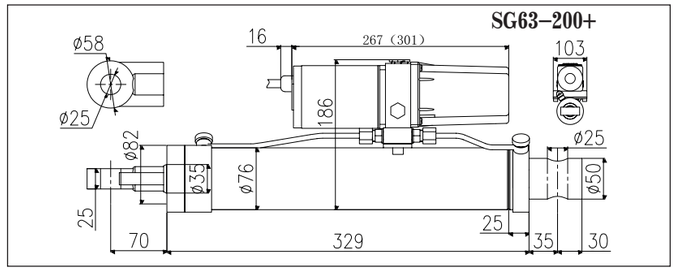


| Item | SG63-200 | SG63-200+ |
|---|---|---|
| Voltage | DC220V/DC12V/24V/48V | DC220V/DC24V/48V |
| Power | 300W | 800W |
| Route | 200mm | 200mm |
| Top of the lift | 4.5T | 4.5T |
| Retraction force | 2.8T | 2.8T |
| Up speed | 2-3mm/s | 6-7mm/s |
| temperature | -20~60°C | -20~60°C |
| Frequency | 4min/each time | 6min/each time |
| Waterproof rate | IPX6 | IPX6 |
| N.W/G.W | 14KG/14.5KG | 15KG/15.5KG |
| Packing Size | 80×23×15CM | 80×23×15CM |

SD45–130

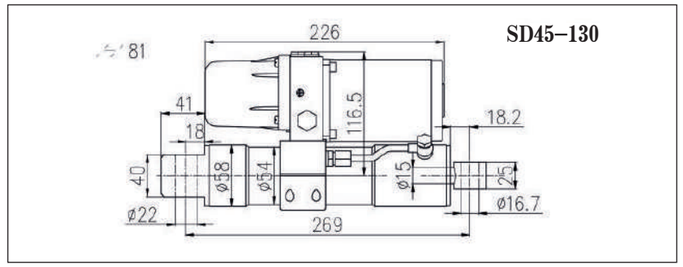


| Item | SD45–130 |
|---|---|
| Voltage | DC12V |
| Power | 300W |
| Route | 130 mm |
| Top of the lift | 2.0T |
| Impact protection | Yes |
| Up speed | 6~8.5mm/s |
| temperature | –20~60° C |
| Noise | Less than 80 db |
| Waterproof rate | IPX7 |
| N.W/G.W | 4.9KG/5.2KG |
| Packing Size | 61×20×13CM |

SD35–150

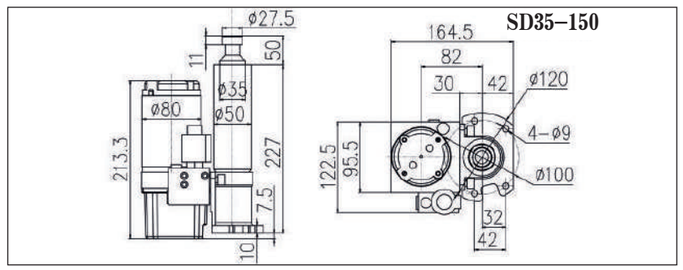


| Item | SD35-150 |
|---|---|
| Voltage | DC24V/48V |
| Power | 500W |
| Route | 150mm |
| Top of the lift | 2T |
| Oil cylinder form | Single action |
| Up speed | 12-20mm/s |
| temperature | -20~60°C |
| Frequency | 4min/each time |
| Waterproof rate | IPX6 |
| N.W/G.W | 6.7KG/7KG |
| Packing Size | 61×20×13CM |

SG32–350

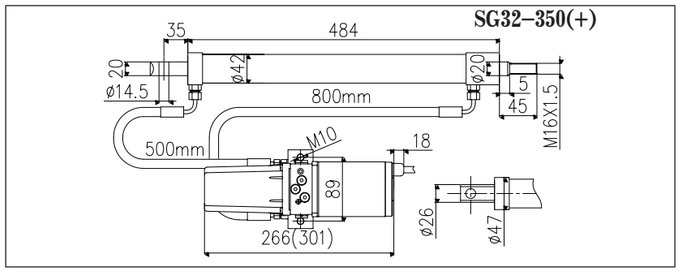


| Item | SG32-350 Fission push rod | |
|---|---|---|
| Voltage | DC220V/DC12V/24V/48V | DC220V/DC24V/48V |
| Power | 300W | 800W |
| Route | 350mm | 350mm |
| Top of the lift | 1T | 1T |
| Retraction force | 0.5T | 0.5T |
| Up speed | 10-12mm/s | 20-25mm/s |
| temperature | -20~60°C | -20~60°C |
| Frequency | 4min/each time | 6min/each time |
| Waterproof rate | IPX6 | IPX6 |
| N.W/G.W | 8KG/8.5KG | 9KG/9.5KG |
| Packing Size | 80×20×13CM | 80×20×13CM |

SG40–60F

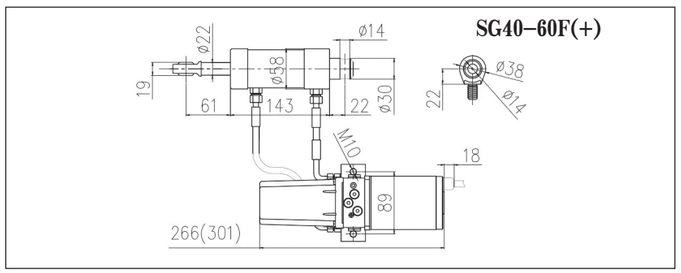


| Item | SG40-60F Fission push rod | |
|---|---|---|
| Voltage | DC220V/DC12V/24V/48V | DC220V/DC24V/48V |
| Power | 300W | 800W |
| Route | 600mm | 60mm |
| Top of the lift | 1.8T | 1.8T |
| Retraction force | 1T | 1T |
| Up speed | 7-8mm/s | 15-18mm/s |
| temperature | 20~60 | 20~60 |
| Frequency | 4min/each time | 6min/each time |
| Waterproof rate | IPX6 | IPX6 |
| N.W/G.W | 5.9KG/6.4KG | 6.9KG/7.4KG |
| Packing Size | 80×20×13CM | 80×20×13CM |